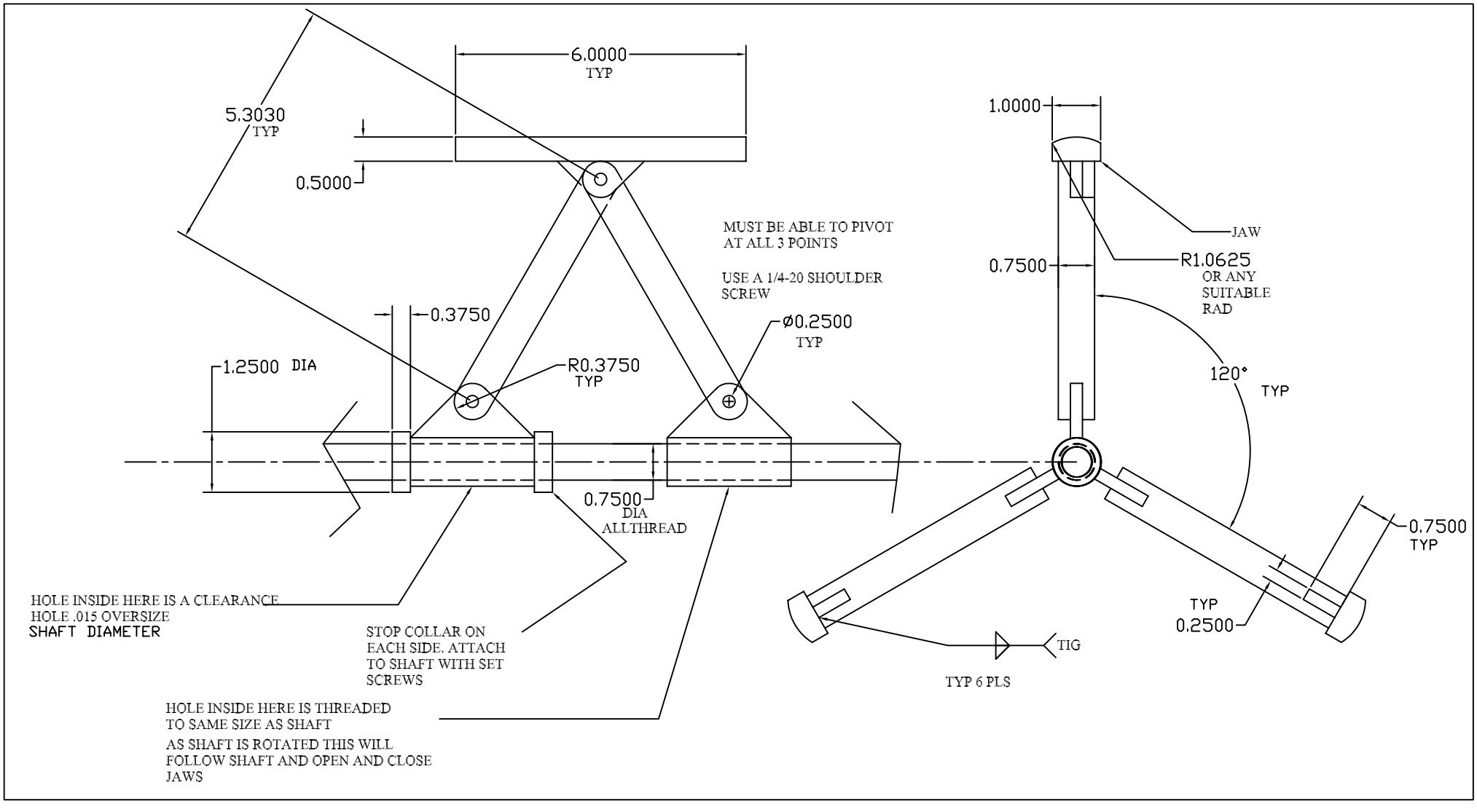
6.0000
TYP
5.3030
TYP
0.5000
MUST BE ABLE TO PIVOT
AT ALL 3 POINTS
USE A 1/4-20 SHOULDER
SCREW
0.3750
Ø0.2500
TYP
1.2500 DIA
R0.3750
TYP
0.7500
DIA
ALLTHREAD
HOLE INSIDE HERE IS A CLEARANCE
HOLE .015 OVERSIZE
SHAFT DIAMETER
STOP COLLAR ON
EACH SIDE. ATTACH
TO SHAFT WITH SET
SCREWS
HOLE INSIDE HERE IS THREADED
TO SAME SIZE AS SHAFT
AS SHAFT IS ROTATED THIS WILL
FOLLOW SHAFT AND OPEN AND CLOSE
JAWS
1.0000
JAW
0.7500
R1.0625
OR ANY
SUITABLE
RAD
120°
TYP
0.7500
TYP
TYP
0.2500
TIG
TYP 6 PLS