DET	QTY	MTL	DESCRIPTION
1	1	304L	1.0 DIA X 1.125
2	1	BRASS	.312 DIA X 1.375
3	1	SPRING STEEL	.125 DIA X .500 SPG PIN

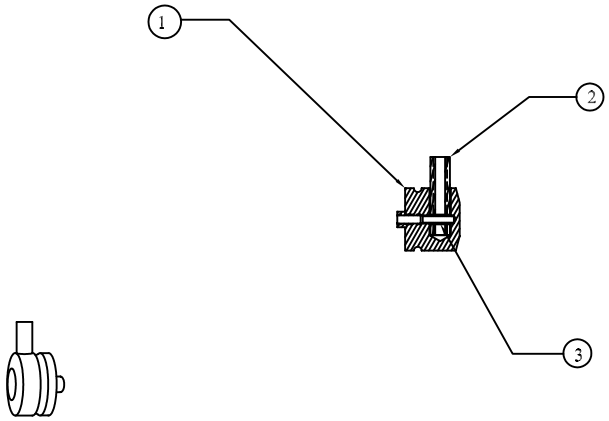

ISOMETRIC VIEW

DRAWN: J.B.W.
DATE: 10-02-02 SHT: 1 OF 2
TOM LUG

POLISH TO A BRITE FINISH
MAY BE POWDER COATED
OR NICKEL PLATED

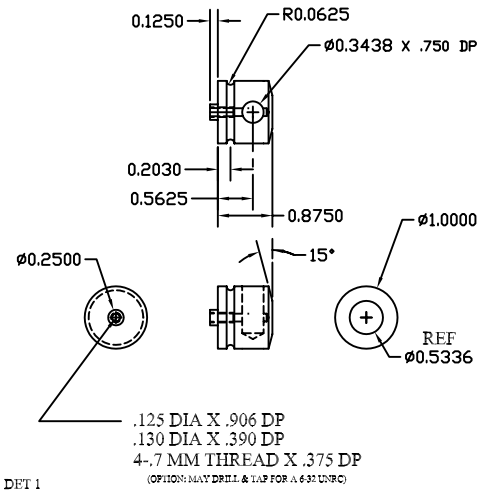

DET 1
1 REQD
MTL: 304 SST OR ALUMINUM OR BRASS

POLISH TO A BRITE FINISH
COAT WITH CLEAR LACQUER OR
ACRYLIC

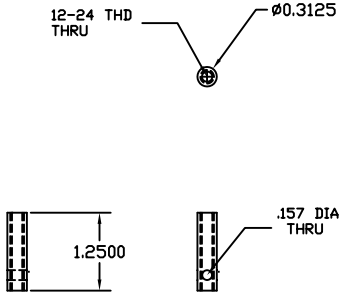

DET 2
1 REQD
MTL: COMMON BRASS

DRAWN: J.B.W.
DATE: 10-02-02 SHT: 2 OF 2
TOM LUG